MITSUBISHI FUSO DIESEL TRUCK CHASSIS WITH CAB
***

MODEL FK65FLZ2RFAA
DRAWING NO. AFKD-0636

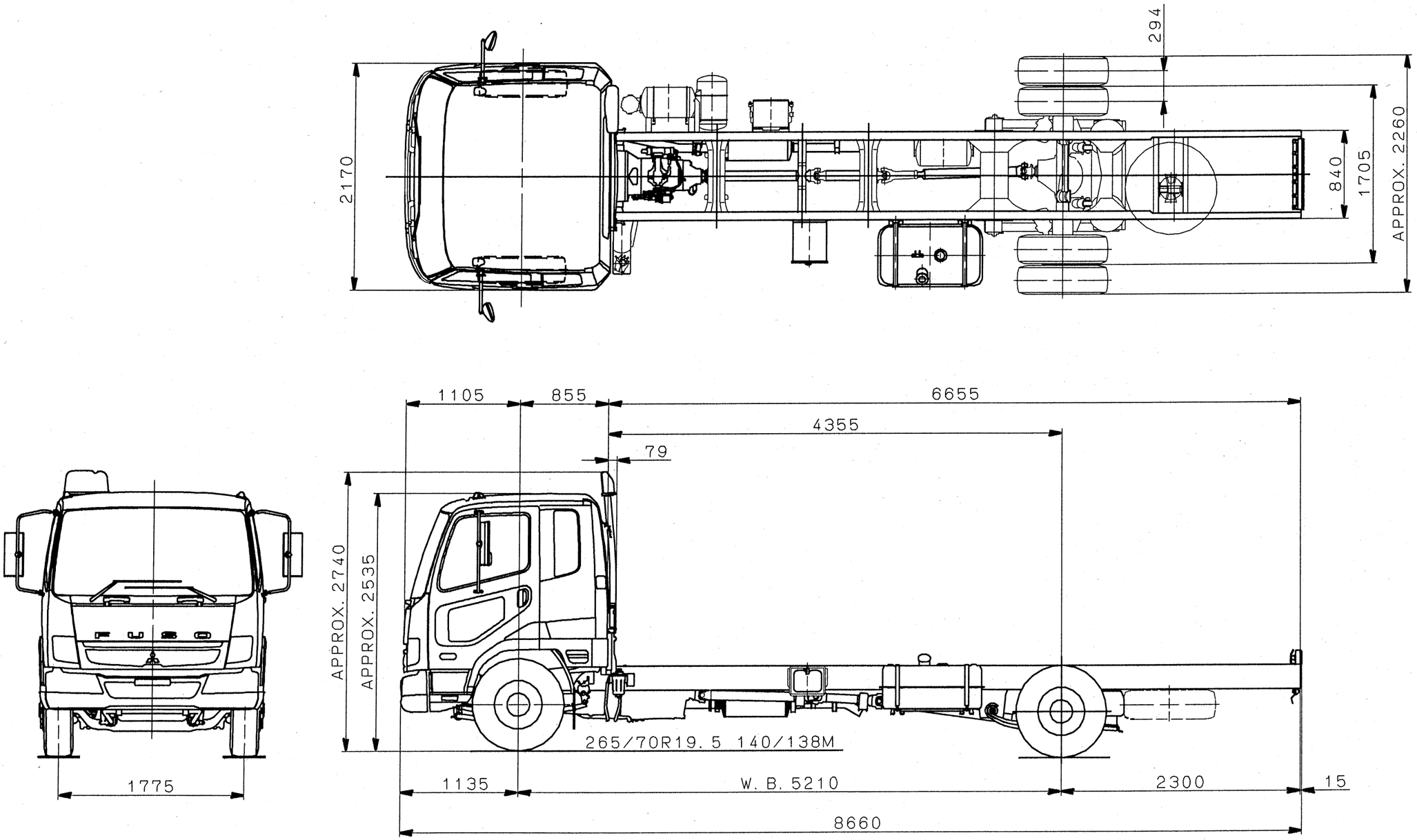

EXP AUSTRALIA
fa-fk65fz-01,,,